California Polytechnic State University Pomona
DEPARTMENT OF ELECTRICAL & COMPUTER ENGINEERING

Digital Logic Design Laboratory

ECE 2300L

Report #8 Experiment 11

4-Bit Signed Full Adder/Subtractor

Prepared by

Kevyn Santos & Yanming Feng

Presented to

Dr. Yazdy R Mostafa

November 30, 2023

Introduction:

In this lab we will be using a JK Flip flop to make a T flip flop for our circuit in which we need to make a 7-segment display display 0,1,2,3 in sequence on a loop.

Pre-Lab:

T1 = Q0'

T0 = Q1

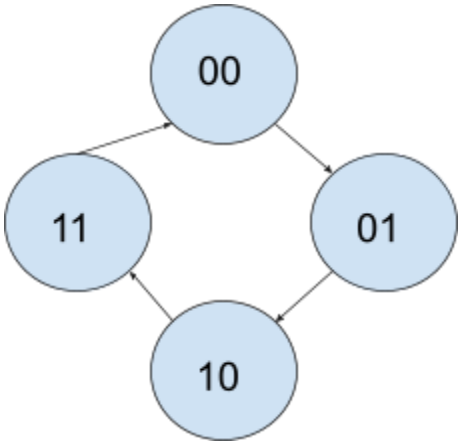

State table

Current state	Input	Next state
00	00	00
00	01	01
01	00	10
01	01	11
10	00	11
10	01	00
11	00	01
11	01	10

T1 K-map

	0	1	11	10
0	0	1	1	0
1	0	0	1	1
11	1	0	0	1
10	1	1	0	0

T0 K-map

	0	1	11	10
0	0	1	0	1
1	0	0	1	1
11	1	0	1	0
10	1	1	0	0

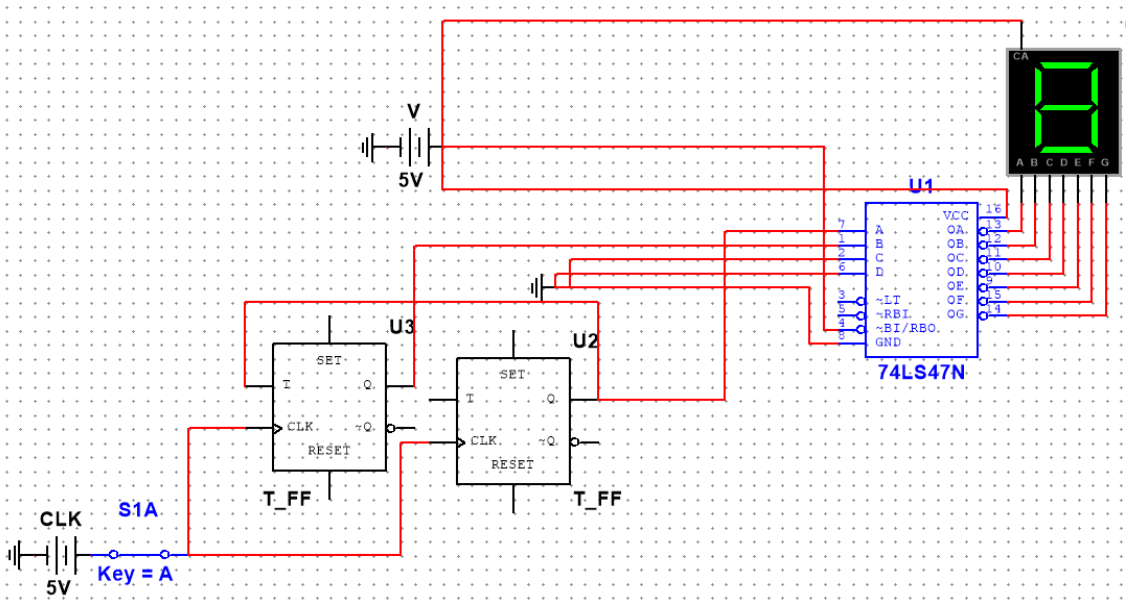

DM7473

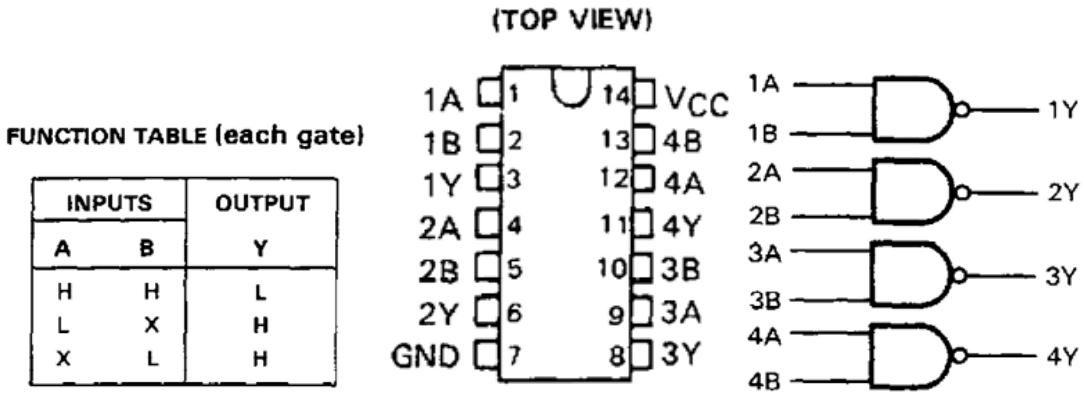

Procedure:

In figure 1 our display shows a “0” for the first iteration.

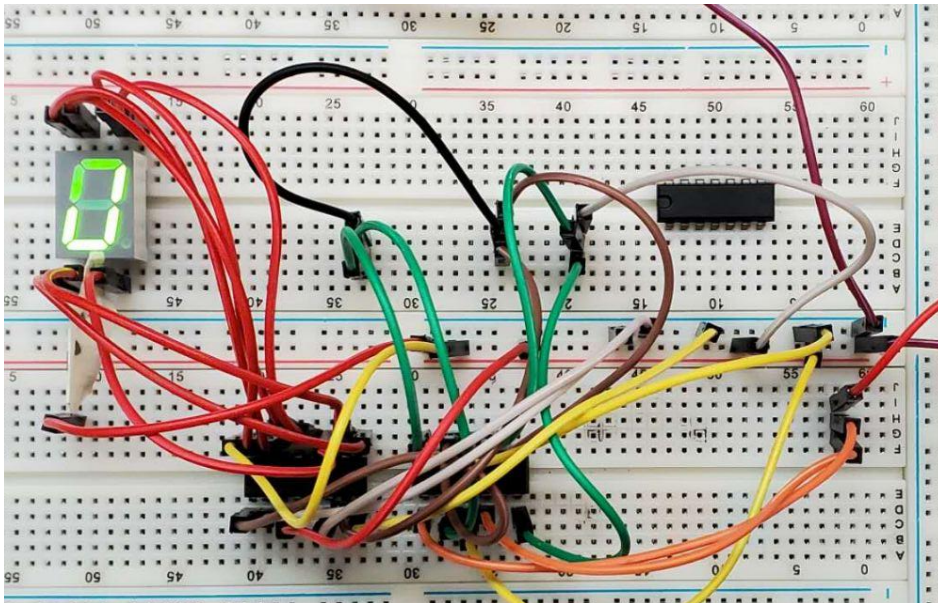

In figure 2 our display shows a “1” since the next cycle of our flip flop occurred.

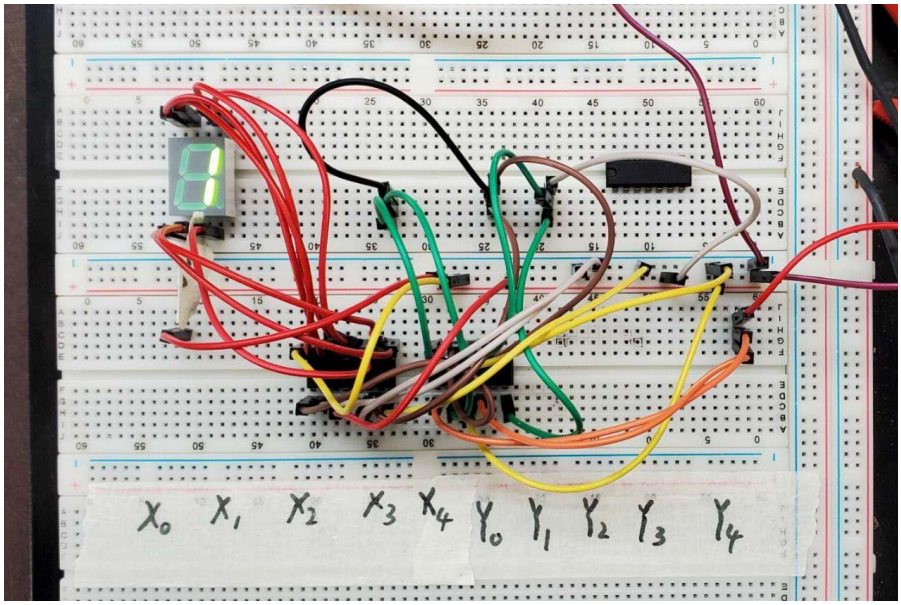

In figure 3, our display shows a 2 because our flip flop has done another cycle, moving the number up by 1.

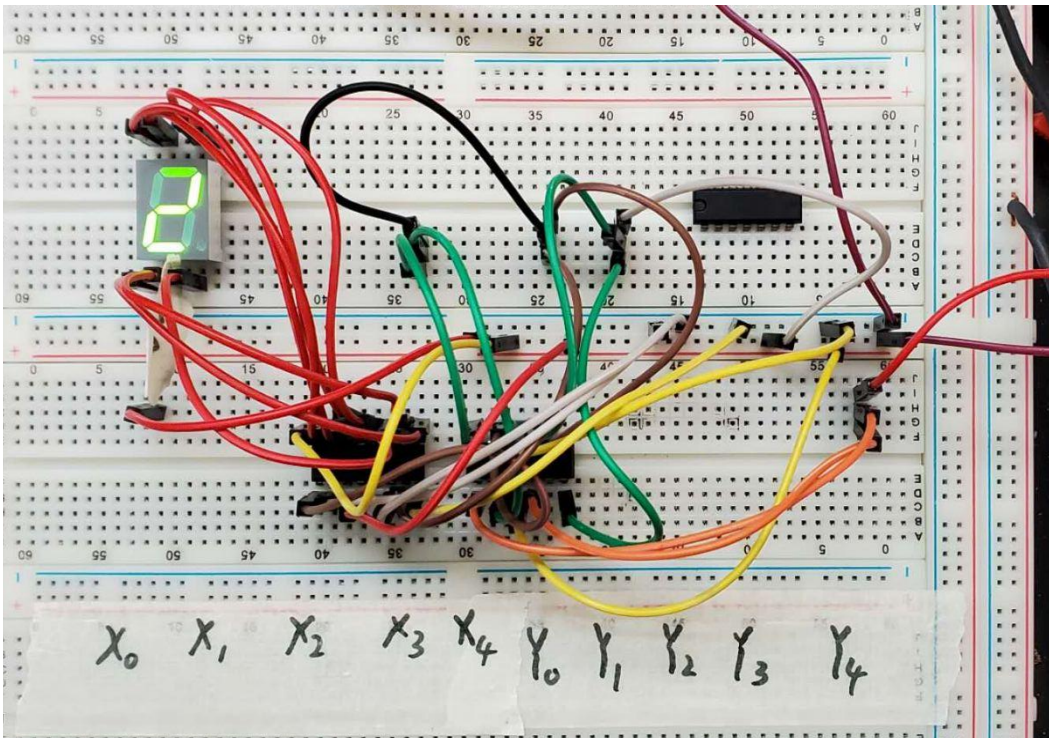

In figure 4, our flip flop cycle completes at three and then restarts back to 0.

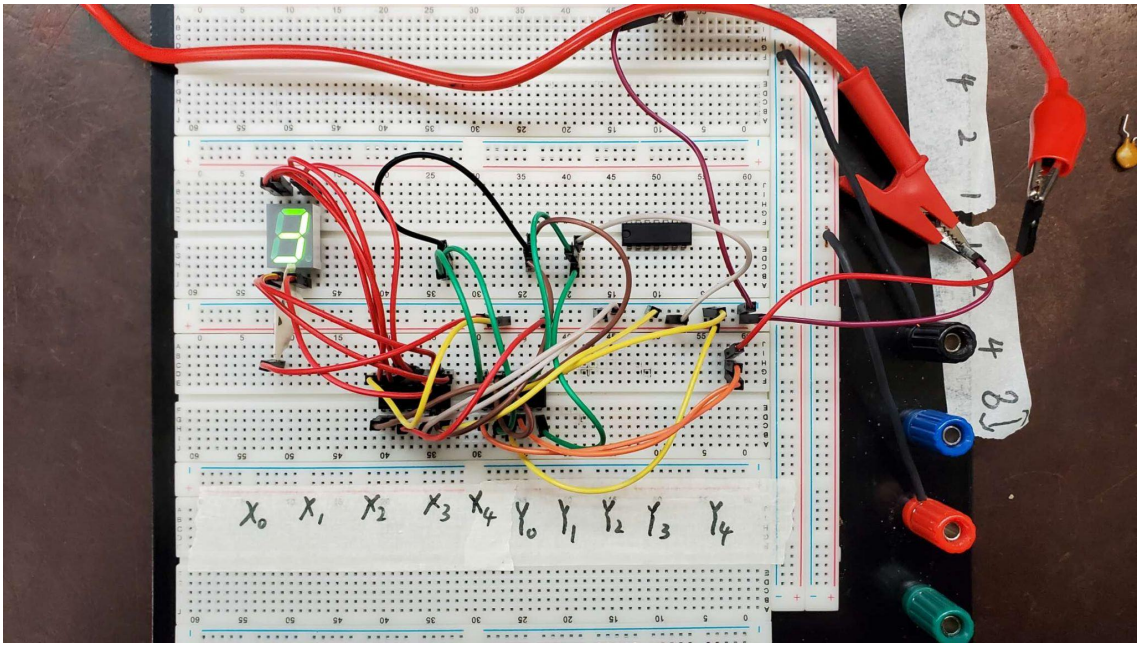

Post-Lab:

The T flip-flop is not commercially available. To obtain a T flip-flop you tie your T input to the J & K inputs of a JK - flip flop.

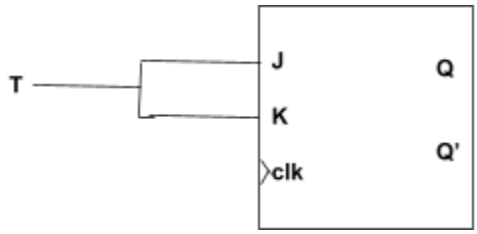

Conclusion:

During this lab we were able to complete our objectives which was to create a counter that went from 0 to 3 and then restarted. We accomplished this by using a JK flip flop and then using it as a T-flip flop. Using the function generator we set our correct frequency, amplitude, and offset for the circuit to fully work. Overall this lab was very informative and refreshed us on how to use the function generator, as well as taught us how to use flip flops.